ALTRONIC RESEARCH, INC.

P.O. BOX 249, YELLVILLE, ARKANSAS, U.S.A. 72687-0249

PHONE 870-449-4093 FAX 870-449-6000

1-800-482-LOAD (5623) in US

altronic.com

MODEL 1100 SERIES
OIL COOLED RF COAXIAL LOAD



LIMITED WARRANTY

We take pride in manufacturing products of the highest quality and we warrant them to the original purchaser to be free from defects in material and workmanship for the period of one year from date of invoice. Additionally, products of our manufacture repaired by us are warranted against defects in material and workmanship for a period of 90 days from date of invoice, with the provisions described herein.

Should a product or a portion of a product of our manufacture prove faulty, in material or workmanship, during the life of this warranty, we hereby obligate ourselves, at our own discretion, to repair or replace such portions of the product as required to remedy such defect. If, in our judgment, such repair or replacement fails to be a satisfactory solution, our limit of obligation shall be no more than full refund of the purchase price.

This warranty is limited to products of our own manufacture. Equipment and components originating from other manufacturers are warranted only to the limits of that manufacturer's warranty to us. Furthermore, we shall not be liable for any injury, loss or damage, direct or consequential, arising out of the use, or misuse (by operation above rated capacities, repairs not made by us, or any misapplication) of the equipment. Before using, the user shall determine the suitability of the product for the intended use; and the user assumes all risk and liability whatsoever in connection therewith.

The foregoing is the only warranty of Altronic Research Incorporated and is in lieu of all other warranties expressed or implied.

Warranty returns shall first be authorized by the Customer Service Department and shall be shipped prepaid. **Warranty does not cover freight charges.**

TABLE OF CONTENTS

MODEL 1100 SERIES

SECTION **PAGE**

Warranty 2
Warnings and Precautions....4
Introduction....5

I. Description and Leading Particulars
- 1-1 Purpose and Application of Equipment....5
- 1-2 Equipment Supplied 5
- 1-3 Equipment Required But Not Supplied....5
- 1-4 General Description....5
- 1-5 Mechanical Description....5
- 1-6 General Principle of Operation....5
- 1-7 Operating and Adjustment Controls....5
- 1-8 Operator Training 6

II. Preparation for Use and Reshipment
- 2-1 Unpacking Equipment....7
- 2-2 Pre-Installation Inspection....7
- 2-3 Pre-installation Test....7
- 2-4 Installation 7
- 2-5 Location....7
- 2-6 Mounting 7
- 2-7 Connections 8
- 2-8 Preparation for Reshipment....8

III. Operating Instructions
- 3-1 Normal Operation....8
- 3-2 Shutdown....8

IV. Maintenance
- 4-1 Cleaning....9
- 4-2 DC Resistance....9
- 4-3 Coolant....9
- 4-4 RF Circuit 10
- 4-5 Resistor Replacement 10

V. Drawings
- Outline Drawings....11
- Wiring Schematic (Model 1110) 13

VI. Specifications....14

PRECAUTIONS

≈DANGER≈

Do not attempt any service or parts replacement without first disconnecting all RF power. Failure to do so may result in serious or *fatal electrical shock*.

WARNING

The thermal alarm switch indicates an overtemperature condition of the load and is not to be used for VSWR fault or transmitter protection.

WARNING

The vent plug must be used at all times when operating the unit or when the unit is cooling. Failure to do so could result in an explosion causing severe burns.

OPERATING TEMPERATURE WARNING

Care should be taken to operate unit below stated maximum operating temperature. OPERATION ABOVE RATED TEMPERATURE MAY CAUSE DAMAGE TO UNIT.

CAUTION

DO NOT APPLY MORE THAN RATED POWER TO UNIT.
DAMAGE CAN OCCUR IF LARGE OVERLOADS, TEMPORARILY OR PERMANENTLY, ARE APPLIED.

INTRODUCTION

This handbook was prepared for skilled personnel as an aid in understanding and performing installation, service and maintenance procedures for the Model 1100 Series RF Coaxial Load. Personnel are considered to be skilled if they have the necessary knowledge and practical experience of electrical and radio engineering to appreciate the various hazards that can arise from working on radio transmitters, and to take appropriate precautions to ensure the safety of personnel.

SECTION I

DESCRIPTION AND LEADING PARTICULARS

1-1. Purpose and Application of Equipment. The Model 1100 Series RF Coaxial Loads are designed to safely dissipate their specified rated maximum of electrical energy within a frequency range of DC to 1 GHz in the regular series, and 470-890 MHz in the digital series.

1-2. Equipment Supplied. The Model 1100 Series Loads are supplied with standard RF connectors as shown below.

MODEL 1101	MODEL 11015	MODEL 11025	MODEL 1105	MODEL 1110
QC, Stub	QC, Stub	QC, Stub	QC, 1-5/8"EIA, 3-1/8"EIA	QC, 1-5/8"EIA, 3-1/8"EIA

MODEL 1101D	MODEL 11015D	MODEL 11025D	MODEL 1105D	MODEL 1110D
QC, Stub	QC, Stub	QC, Stub	QC, 1-5/8"EIA, 3-1/8"EIA	QC, 1-5/8"EIA, 3-1/8"EIA

1-3. Equipment Required But Not Supplied. The Model 1100 Series Loads are complete as supplied, but the user must furnish RF input, and alarm indicator cable.

1-4. General Description. The Model 1100 Series Loads are enclosed in a single aluminum powder coated case. The RF connector is located on the front panel of the load.

1-5. Mechanical Description. The Model 1100 Series Loads consist of a 50 ohm non-reactive resistor assembly which is cooled by hydrocarbon dielectric oil and ambient air. The vent plug located on top of the unit relieves internal pressure created from coolant expansion.

1-6. General Principle of Operation. After ascertaining that the Model 1100 Series Load is correctly connected to the RF source and the transmitter alarm, operate transmitter as desired.

1-7. Operating and Adjustment Controls. The Model 1100 Series Loads have no indicators or operating controls, nor are field adjustments necessary or possible.

1-8. <u>Operator Training.</u> The operator of this equipment must have the following skills/knowledge:

- An understanding of the purpose of the equipment;
- An understanding of the principles of operation of the equipment;
- An understanding of the normal operating procedures for the equipment;
- An understanding of the normal and abnormal indications which may be presented at the control point;
- The proper procedures for starting, using and stopping the equipment under normal conditions;
- The proper procedure for stopping the equipment under abnormal or emergency conditions;
- The proper procedure to lock out and mark controls prior to allowing or commencing maintenance on the equipment;
- The proper procedure to obtain clearance to remove lockouts and out-of-service marks and return the equipment to normal service.

SECTION II

PREPARATION FOR USE AND RESHIPMENT

2-1. Unpacking Equipment. Inspect outer cartons for evidence of damage during shipment prior to unpacking. *Claims for damage in shipment must be filed promptly with the transportation company involved*. Otherwise unpack the units with care and retain package materials for any reshipment.

2-2. Pre-installation Inspection. Conduct a thorough inspection of the units, paying particular attention to the following items:

a. Screws in place and tight.
b. All panels and fins free of dents and scratches.
c. RF connector visually OK. While inspecting RF connector, measure DC resistance of the unit by reading from the center conductor to the outer conductor. Compare this reading to that on the specification sheet at the end of this manual. Reading should be ± 2 ohm. If not, consult factory.
d. Replace shipping plug with the vent plug. Keep the shipping plug with the unit for future maintenance or shipping.

WARNING

The vent plug must be used at all times when operating the unit or when the unit is cooling. Failure to do so could result in an explosion causing severe burns.

2-3. Pre-installation Test. Verify the thermal switch is closed by connecting an ohmmeter or a battery operated test lamp across the ¼ inch spades on the switch. For units with fans, connect the unit to a suitable source of AC power. Turn main switch on and check for quiet fan operation.

2-4. Installation. The Model 1100 Series RF Coaxial Load must be installed in a location convenient for servicing. Consideration should be given to adequate accessibility for maintenance and unit replacement. No attempt is made in this handbook to present complete installation instructions, since physical differences in facilities will determine the installation procedure. General guidelines are outlined in subsequent paragraphs.

2-5. Location. Locations selected for the Model 1100 Series Load should have an ambient temperature between +5 F (-15 C) and 104°F (40°C) for operation. The room should be well ventilated to prevent excessive temperature rise and consequent derating of the unit. The location must allow sufficient area to allow clearance of at least 12 inches (30cm) around all sides of the load and free from combustible materials.

2-6. Mounting. The Model 1100 Series Loads are designed to be portable or used in a fixed installation. It is to be installed in a horizontal position only with the vent plug facing upward.

2-7. Connections. There are two connections on conventional RF coaxial oil cooled loads: the RF connection on the front panel of the unit and the thermal interlock switch. Connect the RF transmission line using standard coaxial line coupling kits appropriate for the frequency and power level of operation. The thermal interlock switch consists of two ¼ inch spades connecting to the interlock circuit.

2-8. Preparation for Reshipment. Remove the vent plug and replace with the shipping plug. Wrap the vent plug with protective padding and secure it to the load. It is not necessary to drain the coolant with the shipping plug in place. Wrap the RF connector in protective padding. Packaging should provide protection against abrasion and impact.

SECTION III

OPERATING INSTRUCTIONS

3-1. Normal Operation. The Model 1100 Series RF Coaxial Loads are passive devices. There are no indicators or operating controls. Turn on RF power at the source. Follow instructions for the specific generator equipment.

3-2. Shutdown. Turn off RF power at the source. The installed interlock will automatically shut down the transmitter unit when properly connected if an overheat condition exists.

SECTION IV

MAINTENANCE

WARNING!!

BEFORE PERFORMING ANY MAINTENANCE:

1. **DISCONNECT RF CONNECTOR ASSEMBLY.**
2. **OPEN TRANSMITTER VSWR INTERLOCK CIRCUIT.**

FAILURE TO FOLLOW THESE DIRECTIONS MAY CAUSE FATAL ELECTRICAL SHOCK!

4-1. Cleaning. The enclosure of the Model 1100 Series RF Coaxial Load is finished with a durable coating system. Periodically wipe free of dust and dirt as needed. Heat dissipation can be reduced if excessive dust is allowed to accumulate on the cooling fins. The RF connector should be cleaned with a non-residue contact cleaner. Check for any coolant leakage or corrosion at this time.

4-2. DC Resistance. Start DC resistance tracking before the load is put into service and measure annually thereafter. Measure with an accurate ohmmeter on the load when it is at a temperature between 20 and 25°C (68-77°F) following these steps:

a. Turn off RF power and interlock circuitry.
b. Disconnect RF line.
c. Connect the meter test lead to the center and outer conductor of the load resistor.
d. Compare the reading with the previous reading and with the baseline resistance when the load was put into service. A difference of more than 2 ohm from the previous or baseline reading could indicate a failing resistor.

4-3. Coolant. Coolant lifetime varies depending on usage and operating temperatures. During heavy usage, check coolant approximately every 500 hours, and for less usage, approximately every 2,500 hours. Check level with provided dipstick by removing vent plug. Check for and correct any leaks if necessary. Further inspect coolant by following these steps:

a. Remove the vent plug and install the shipping plug.
b. Stand the load on its back with the connector end up to avoid any coolant leakage.
c. Unscrew the six T-15 torx screws to remove the connector.
d. Lift the resistor assembly, allowing coolant to drip back into tank.
e. The coolant should be a faint amber color and clear of any burning color or smell. If not, drain the coolant and add coolant according to the following chart or until the coolant reaches about 5 inches (125cm) below the top surface of the resistor assembly mounting ring. Use only Altronic dielectric oil to prevent any damage to the load.

Dielectric Oil Volume in Gallons:

MODEL 1101	MODEL 11015	MODEL 11025	MODEL 1105	MODEL 1110
1.64	2.17	2.95	8.2	8.2

4-4. RF Circuit. The RF Load Resistor does not require any periodic maintenance and the only repairs possible are the replacement of parts in the connector or support portions of the resistor assembly or the replacement of resistors.

4-5. Resistor Replacement. The resistor should provide at least 5,000 hours of operation in normal operating conditions. To change the resistor assembly:

a. Follow steps a through d as in 4.3 coolant inspection.
b. Check the O-Ring for even positioning around the flange and for any signs of deterioration. Replace the O-Ring if it has cracks or is no longer pliable.
c. Replace the entire resistor assembly. It cannot be further disassembled.
d. Put the connector back in place and tighten the six T-15 torx screws.
e. Remove the shipping plug and reinstall the vent plug.
f. For any maintenance beyond these steps outlined above, contact Altronic Research.
g. When consulting the factory for replacement parts, please provide the model and serial number of the load requiring service.

SECTION V

OUTLINE DRAWINGS

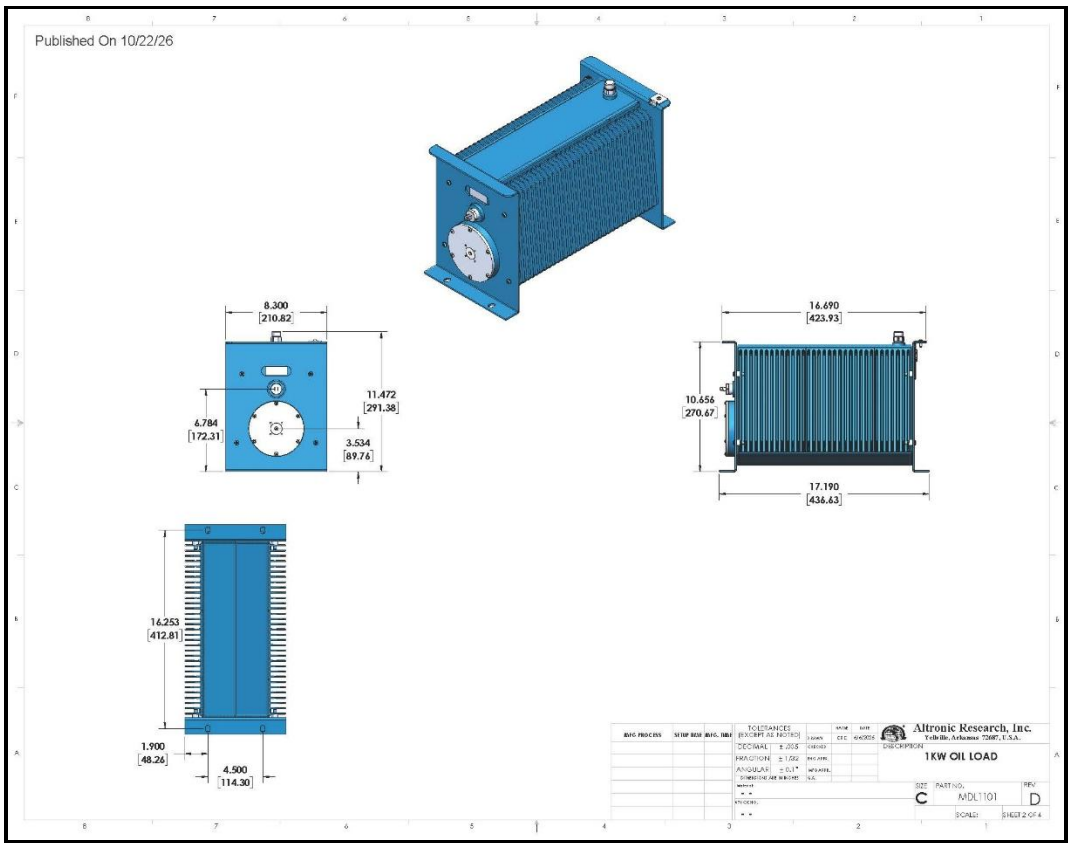

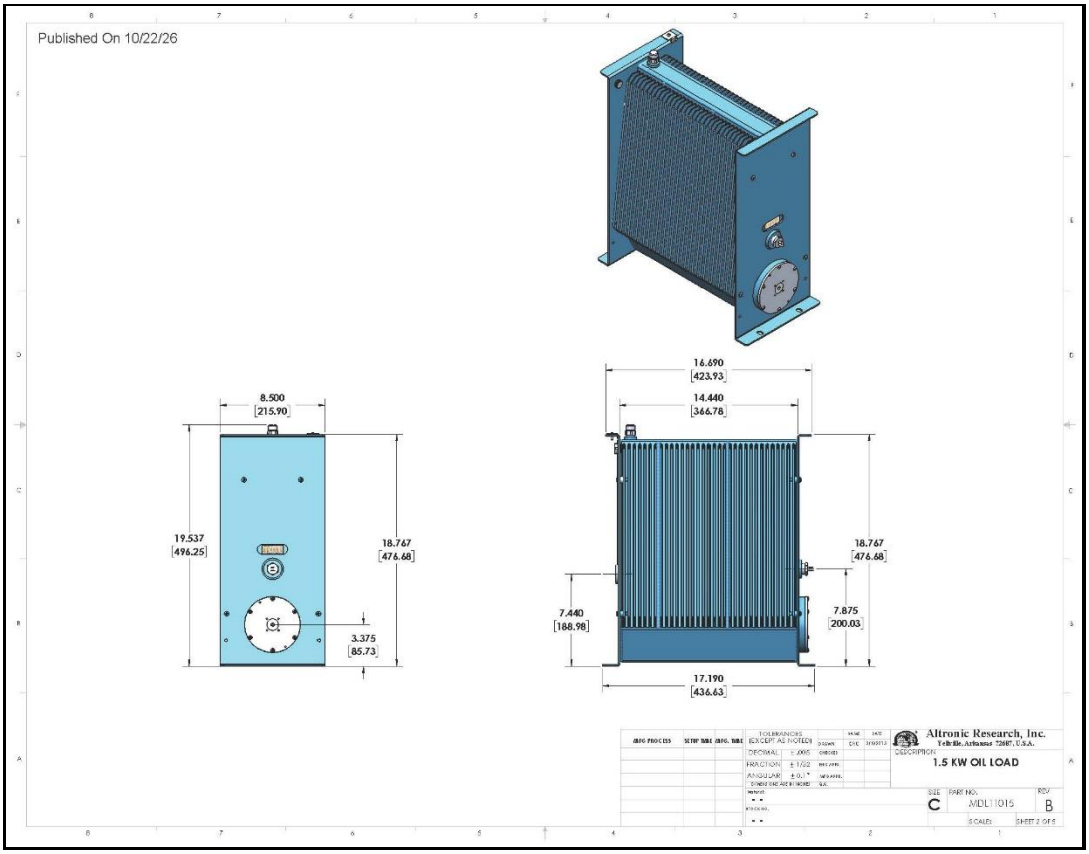

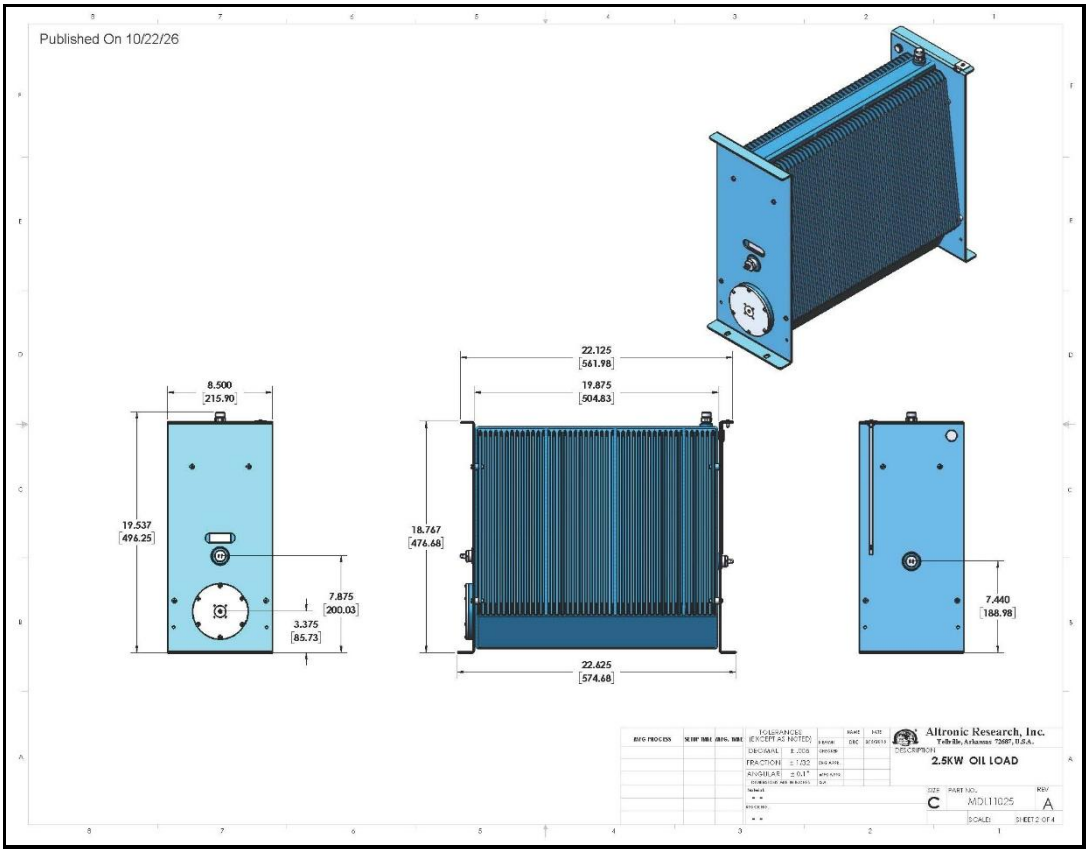
Published On 10/22/26
8.500
215.90
19.537
496.25
7.875
200.03
3.375
85.73
22.125
561.98
19.875
504.83
18.767
476.68
22.625
574.68
7.440
188.98
Altronic Research, Inc.
2.5KW OIL LOAD
C
MDL11025
A

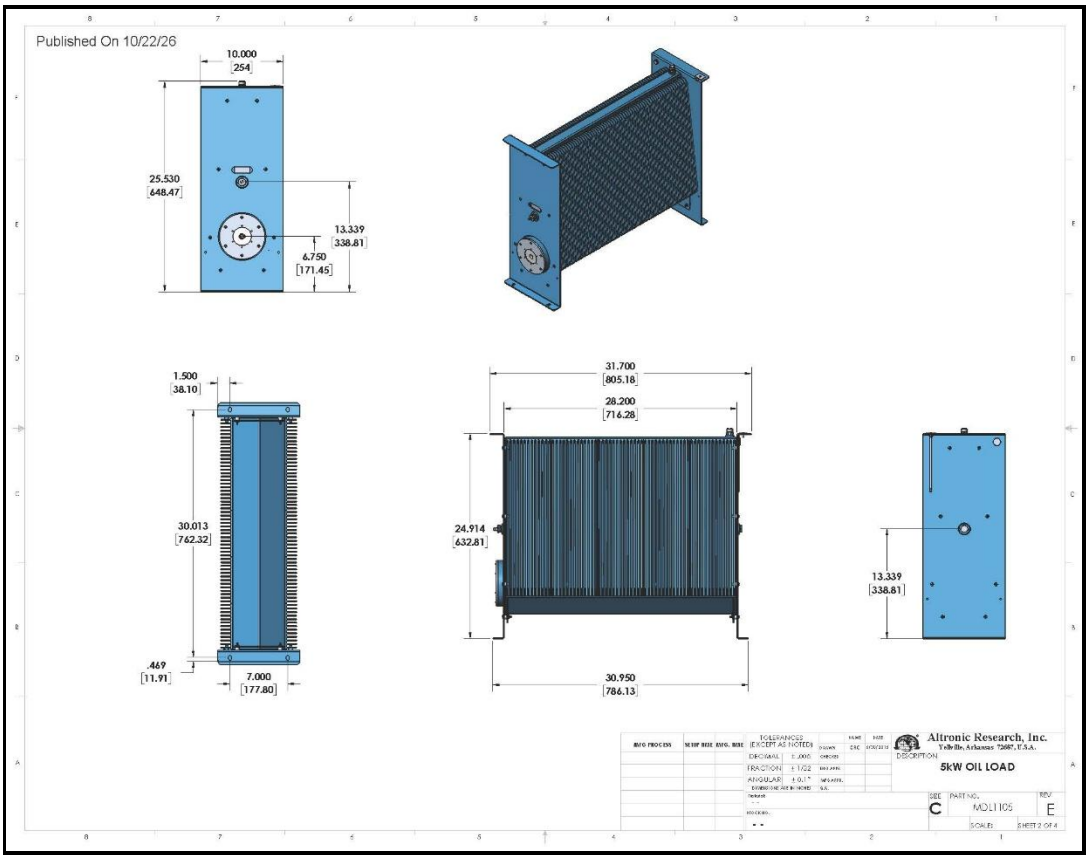
Published On 10/22/26
10.000
254
25.530
648.47
13.339
338.81
6.750
171.45
1.500
38.10
30.013
762.32
.469
11.91
7.000
177.80
31.700
805.18
28.200
716.28
24.914
632.81
30.950
786.13
13.339
338.81
Altronic Research, Inc.
5kW OIL LOAD
C
MDL1105
E

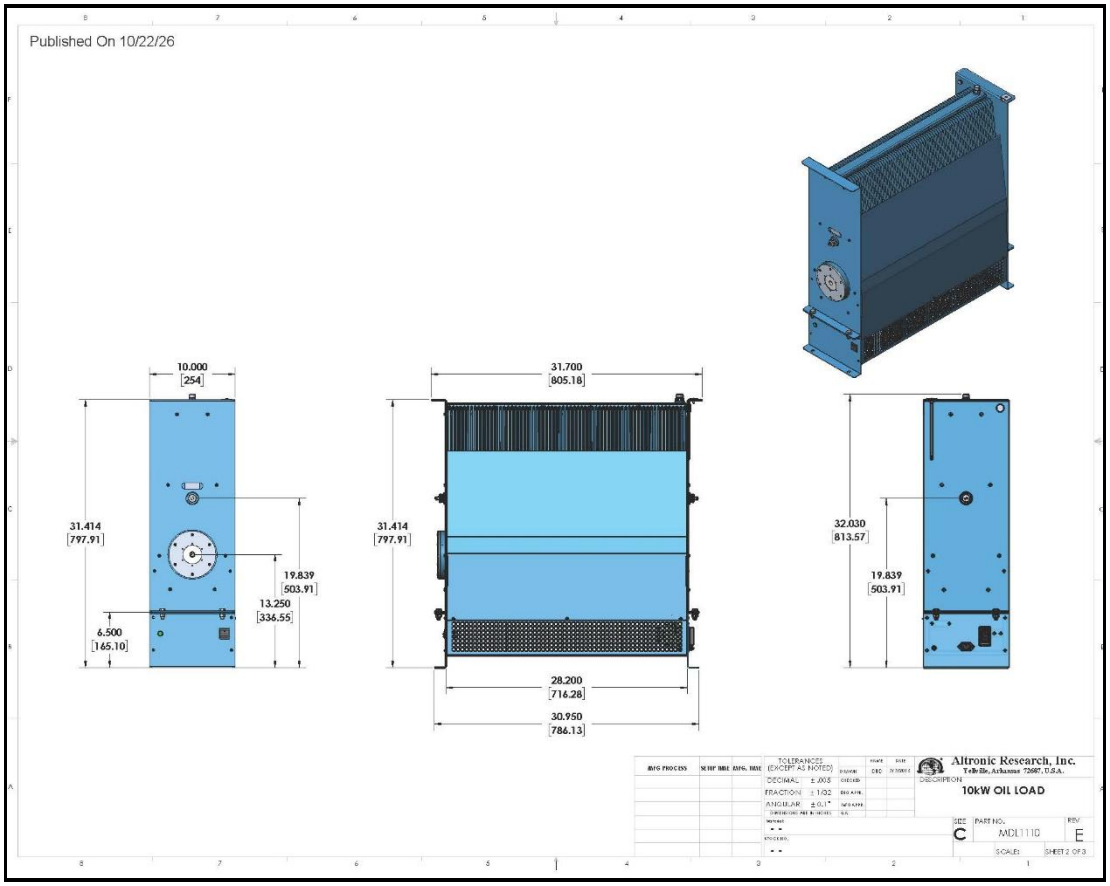
Published On 10/22/26
10.000
[254]
31.414
[797.91]
19.839
[503.91]
13.250
[336.55]
6.500
[165.10]
31.700
[805.18]
31.414
[797.91]
28.200
[716.28]
30.950
[786.13]
32.030
[813.57]
19.839
[503.91]
Altronic Research, Inc.
10kW OIL LOAD
C
MDL1110
E

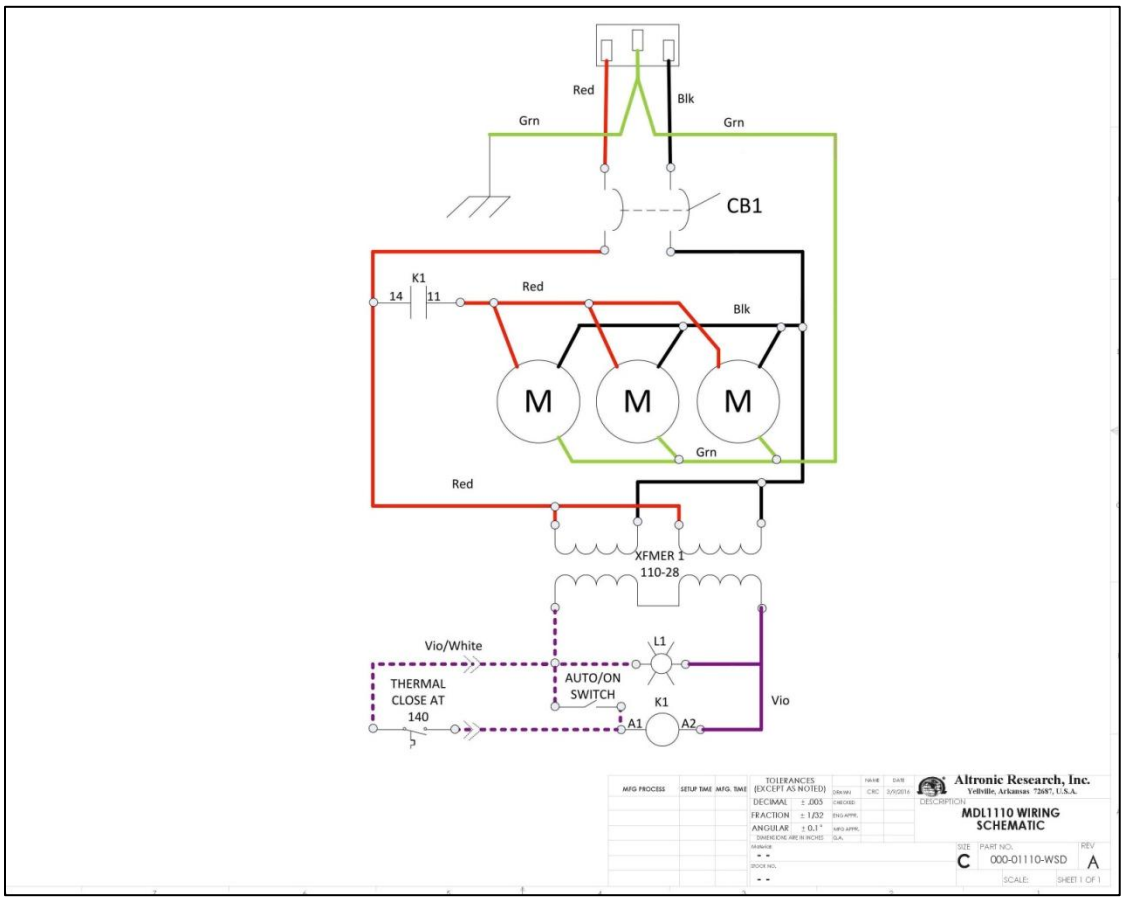
Red
Blk
Grn
Grn
CB1
K1
14
11
Red
Blk
M
M
M
Grn
Red
XFMER 1
110-28
Vio/White
L1
THERMAL
CLOSE AT
140
AUTO/ON
SWITCH
K1
A1
A2
Vio
Altronic Research, Inc.
MDL1110 WIRING
SCHEMATIC
C
000-01110-WSD
A

SPECIFICATIONS
Model 1100 Series RF Coaxial Load

Impedance ---------- 50 ohms nominal

VSWR 1100 Series: DC to 1000 MHz
Models 1101, 11015, 11025 ---------- 1.1:1 Max.
Models 1105, 1110 ---------- <1.15:1
VSWR Digital 1100D series: 470-890 MHz
Models 1101D, 11015D, 11025D ---------- 1.065:1 Max.
Models 1105D, 1110D ---------- <1.1:1

Connectors:
Model QC ----------> QC connector
Model E1 ----------> 1-5/8" EIA flange
Model E3 ----------> 3-1/8" EIA flange

Power Rating @ Sea Level:
Models 1101 and 1101D ---------- 1 KW
Models 11015 and 11015D ---------- 1.5 KW
Models 11025 and 11025D ---------- 2.5 KW
Models 1105 and 1105D ---------- 5 KW
Models 1110 and 1110D ---------- 10 KW

Frequency Range
1100 series ---------- DC to 1000 MHz
Digital 1100D series ---------- 470 to 890 MHz

Cooling Method ---------- Dielectric Oil, Static air

Operating Temperature ---------- 5 to 40°C (41 to 104°F)

Storage Temperature ---------- -40 to +45°C (-40 to +113°F)

Altitude* ---------- 5,000 ft (1520 m)
*(*derate RF power by 2.5% for every 1,000 ft (305m) above5,000 ft.(1,520m.)*

Humidity ---------- 95% noncondensing max

Finish ---------- Blue Powder Coating

Serial No._____Frequency_____Resistance_____ dBA @ 3'__0__

Model_____Inspected by_____Date_____

☆☆☆☆☆☆☆☆☆☆☆☆☆☆☆☆☆☆☆☆☆☆☆☆☆☆☆☆☆☆☆☆☆☆☆

CRAFTED WITH PRIDE IN ARKANSAS, U.S.A.